ISO A1 594mm x 841mm

Rain Water Pipe Detail

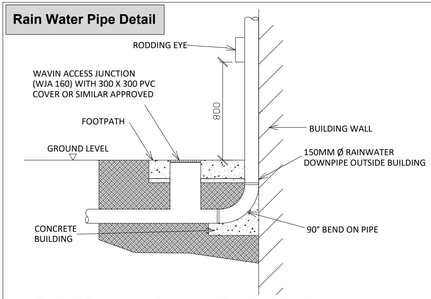

Typical Rainwater Downpipe Detail - Elevation
Scale : 1:25

Soakaway Detail

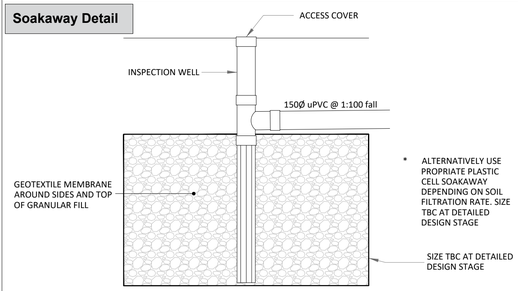

Typical Soakaway Detail - Elevation
Scale : 1:25

Manhole

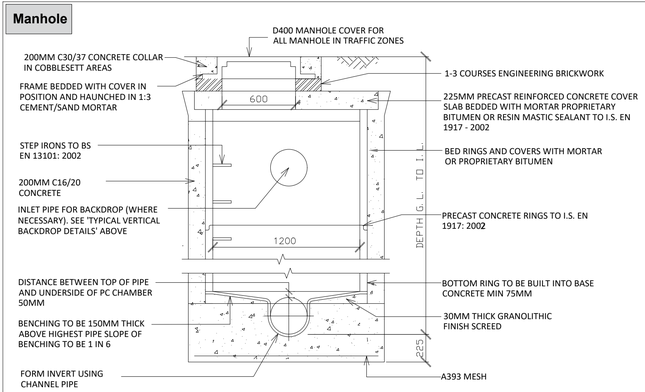

Typical Precast Ring Manhole - Elevation
Scale : 1:25

Road Gully

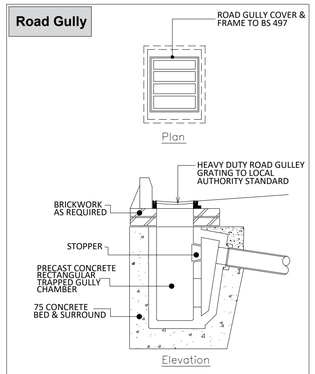

Typical Road Gully Detail
Scale : 1:25

Typical Detail of "KLARGESTER NSFA10" Class 1 Separator

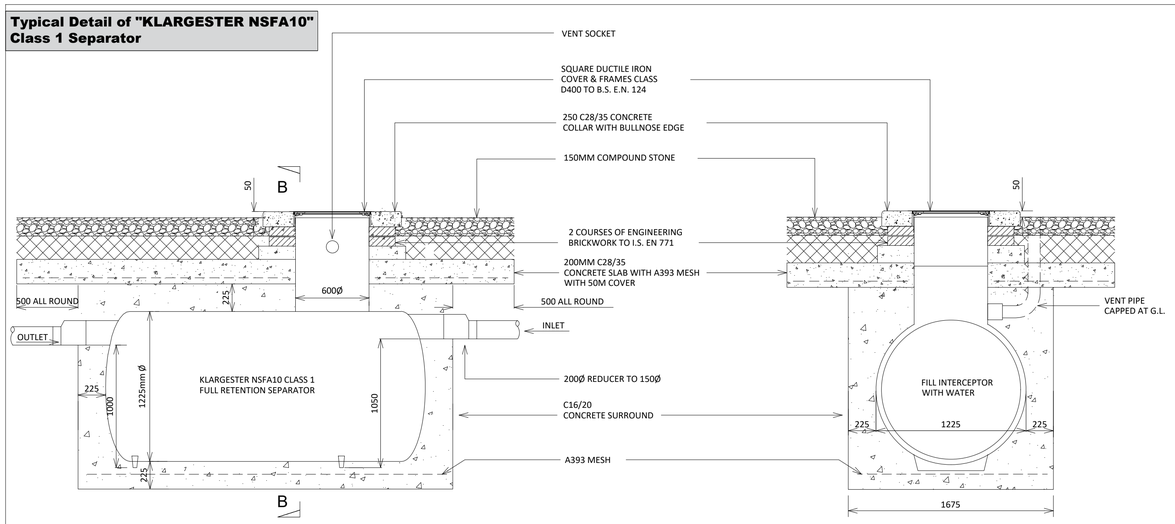

Sectional Elevation
Scale : 1:25

Section B-B
Scale : 1:25

CONSTRUCTION NOTES

1. FILL SEPARATOR WITH WATER AFTER INSTALLATION AND BEFORE BACKFILLING
2. FOLLOW MANUFACTURERS INSTALLATION INSTRUCTIONS
3. FIRST TWO PIPES ON EACH RUN TO HAVE FLEXIBLE JOINTS
4. SEPARATOR TO BE VENTED & FITTED WITH CAP AT GROUND LEVEL

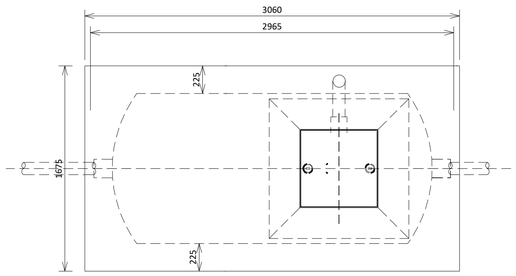

Plan
Scale : 1:25

tli GROUP

Head Office
Beenreigh,
Abbeydorney,
Tralee, Co. Kerry
Ireland
Tel: 00353 66 7135710

Regional Office
Basepoint Business Centre
Stroudley Road, Basingstoke,
Hampshire,
RG24 8UP, UK
Tel: 00 44 1256406664

PROJECT

Ballynahone
Long Duration
Energy Storage

CLIENT

FuturEnergy Ireland

CONSULTANTS

FEHILY TIMONEY 30 YEARS

NOTES: -

ISSUE/REVISION

I/R	DATE	DESCRIPTION
P2	22.08.24	Issued for Planning
P1	30.05.24	Issued for Planning

PROJECT NUMBER

05-1040

SHEET TITLE

Drainage Details

SHEET NUMBER

051040-DR-108

Project Management Initials: Designer: JC Checked: DB Approved: RG